Installation and Operation Manual

ACF-60

Automatic Chlorinating Feeder

Operating Specifications

Inlet Flow:	1.0 - 2.0 gpm
Outlet Flow:	= Inlet Flow
Inlet Pressure:	10 - 45 psi

Maximum Output: 80 lbs. of Available Cl_2 per Day

Capacity: 60 lbs. of Vantage® Calcium Hypochlorite Tablets

Feeder Height	31.5”
Feeder Width	14.5”
Feeder Depth	20”
Feeder weight (full)	110 lbs.
Feeder weight (empty)	50 lbs.
Tubing	5/8” O.D.

For Swimming Pool Use Only

Recommended Pool Size (US Gallons)
up to 200,000 Gallons

FACTORY SUPPLIED INSTALLATION PARTS

25’ – 5/8” Tubing
4 – ½” npt x 5/8” tubing adapters
1- ½” In-line strainer
2- ½” solenoid valves
Flow Meter

INSTALLER SUPPLIED PARTS

Due to the wide variety of installations possible, AllChem Performance Products, LP can not supply all parts and pieces required for installation. Some commonly available plumbing parts and supplies may be supplied by the installer.

REPLACEMENT PARTS

Feeder Assembly	**Part Number**
Complete ACF-60 Feeder	E023060VTG

Part Description	**Part Number**
½” Solenoid Valve	P2002201
Flow Meter	P2002202
In-Line Strainer	P2002203
25’ of 5/8” OD Tubing	P2002225
Feeder Discharge Assembly *(discharge valve body, discharge fitting and locking bolt)*	P601204
Chlorine Feed Assembly *(sieve plate, legs and overflow)*	P601400
Float Assembly	P601206
Eductor Model 3144	P2001207
Check Valve	P2001208
Booster Pump (3/4 hp)	P2001209

Figure 1:
ACF-60
Parts Diagram
(parts not shown to scale)

1. Solution Tank
2. Solution Tank Overflow

Feeder Discharge Assembly

3. Discharge Fitting
4. Float Valve Body

5. Float Assembly
6. Chemical Feed Solenoid Valve
7. Supply Manifold
8. Inlet Water Solenoid Valve
9. Rinse Nozzle
10. Level Switch Assembly
11. Chemical Tank Lid

Chlorine Feed Assembly

12. Sieve Plate Overflow
13. Sieve Plate

14. Mining Nozzle
15. Tablet Hopper
16. Locking Bar
17. Locking Pin

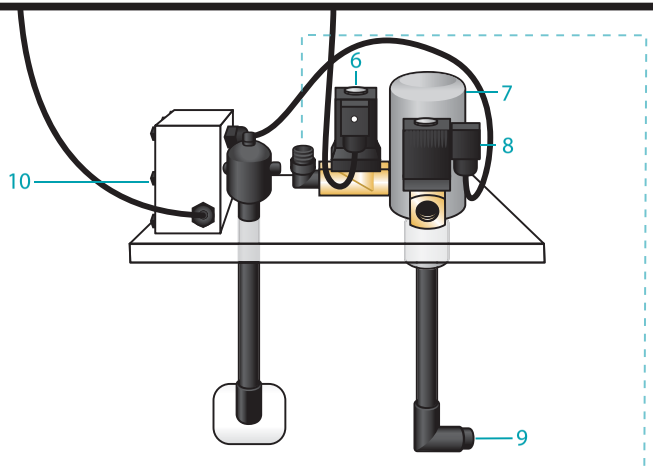

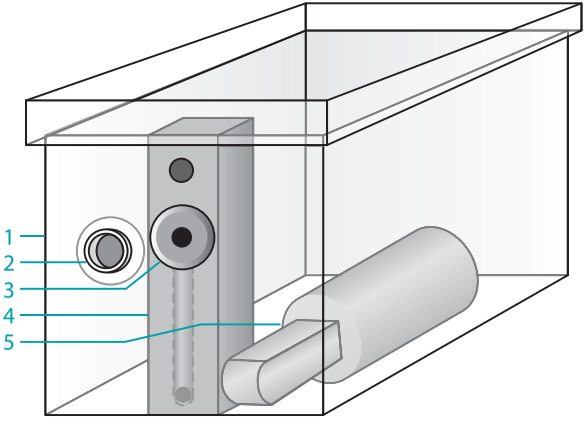

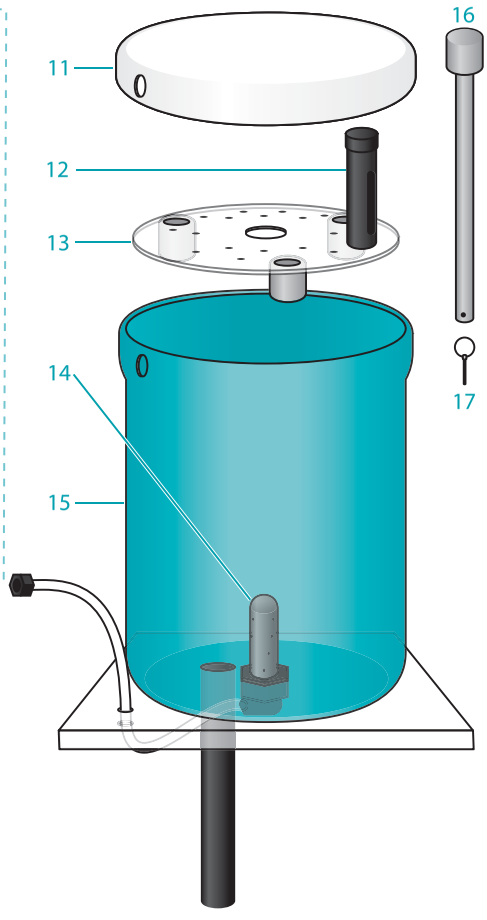

INSTALLATION PROCEDURE

The ACF-60 is designed for the application of VANTAGE® Calcium Hypochlorite Tablets, bearing the EPA Reg. No 69681-14, for the sanitation of swimming pools. Never use any other type of chlorinating or brominating chemical in the ACF-60. The use of other chemicals may lead to explosion, fire or the creation of hazardous gases, possibly leading to personal or bodily injury. The applicability of any limited warranty either expressed or implied is limited to the use of Vantage Calcium Hypochlorite Tablets in the ACF-60 Feeder.

The ACF-60 is designed for use in pools up to 200,000 gallons. It is recommended that the ACF-60 be installed in conjunction with an electronic controller. During operation, frequently check the free chlorine residual in the water with a DPD or other approved test kit and maintain 1.0 to 5.0 ppm by adjusting the output of the feeder accordingly.

This feeder should be installed in a secured maintenance room or other suitable location to prevent general public access to the feeder and associated chemicals.

All electrical connections should be made in accordance with the National Electric Code and all applicable local regulations. Select a chlorinator location that has easy access for maintenance and refilling. This chlorinator must be installed in an area protected from direct sunlight and rain.

It is strongly recommended that a booster pump and venturi be installed to supply the feeder with water and inject the chlorine solution into the return line piping.

This feeder should be installed on a flat, level surface capable of supporting its weight when full.

This feeder is designed to operate at an inlet pressure of 10 – 45 psi. The flow rate will be controlled in the range of 1.0 to 2.0 gpm.

CONNECTING THE ACF-60

RECOMMENDED INSTALLATION METHODS

SIDESTREAM WITH BOOSTER PUMP AND VENTURI *(see Figure 2)*

The preferred installation method utilizes a sidestream, configured with a booster pump and a venturi, to provide a source of supply water to the feeder as well as a mechanism for delivering the resulting chlorine solution to the swimming pool. This installation is illustrated in figure (2). The sidesteam is created using filtered and unheated pool water and returns chlorinated water downstream from the heater. The use of heated pool water to supply the feeder may cause inconsistent feed rates and premature scaling.

The supply water line for the feeder is created by connecting the feeder supply inlet to a location on the booster pump/venturi sidestream prior to the venturi using the 5/8” tubing and the ½” npt x 5/8” tubing adapters. A control valve (not supplied) must be installed to set the flow of incoming water to 2.0 gpm using the supplied flow meter. The in-line strainer must be installed in the supply water line to prevent particulates from potentially clogging the feeder or venturi. The flow meter should should be installed downstream of the in-line strainer. The recommended supply water pressure is 30psi. An operating pressure from 10 to 45 psi is required for proper feeder operation.

Connect the feeder outlet to the venturi using the 5/8” tubing and the ½” npt x 5/8” tubing connectors. The feeder outlet is the ½” npt gray fitting on the end of the solution tank and is identified in figure 2. Install the feeder in a location that minimizes the distance from the feeder outlet to the venturi. If one of the tubing run lengths (supply water or outlet water) must be longer than the other, the supply line should be the greater distance.

Install the booster pump and venturi according to Figure 2. The maximum supply water flow into the feeder is 2 gpm. The venturi must be sized to extract a minimum of 2.0 gpm at all times. The feeder will modulate the effluent water flow to control water level in the feeder.

The booster pump should be interlocked with the pools main circulation pump to ensure that the booster pump will not operate when the circulation pump is off.

An eduction system must be installed that can remove 2 gpm from the feeder in order to allow the feeder to operate at its maximum output. A Vantage Eductor model 3144(P2001207) along with a Vantage Check Valve(P2001208) can be installed with a booster pump(P201209) to provide the necessary suction. In most installations, this combination of parts will provide the necessary suction whenever the return line pressure is less than 19 psi. For specific booster pump and eductor performance information contact your local Vantage Distributor.

For best performance, the injector should be installed so that it is in a straight run of pipe with a run of 10 pipe diameters before and after the injector. On a 1.5" diameter injector, this means that a length of pipe should be run for 15 inches after the injector prior to installing an elbow. Be sure to install valves on the injection system for simplified repair and maintenance. Follow all installation and operating instructions provided by the manufacturer of the pump and injector.

VENTURI WITHOUT BOOSTER PUMP *(see Figure 3)*

While the venturi with booster pump sidestream is the preferred installation method, it may be desirable in some applications to install the venturi without the use of a booster pump. The sidestream is created by using the pressure differential created across the pools filter and heater. The sidestream inlet is installed after the pools circulation pump but before the filter while the sidestream effluent is returned after the heater. The sidestream flow and venturi must be selected to remove a minimum of 2.0 gpm from the feeder at all times. When using this installation method, make all the connections to the ACF-60 as described in the venturi with booster pump installation.

CONNECT THE FEEDER OVERFLOW

The ACF-60 contains an overflow port in both the tablet hopper and the solution chamber. The overflow in the tablet hopper directs water from the tablet hopper to the solution tube below the tablet sieve plate and the solution chamber below. The 1" white fitting on the end of the solution tank is the solution tank overflow. It will prevent water from overfilling the solution tank in the event of a high level shutoff failure. Proper installation requires that an unobstructed 1" drain line be installed from the solution tank overflow (see figure 1) to a floor drain, backwash pit, surge pit, or other suitable location. Some local regulations may require the neutralization of chlorinated water prior to discharge into a sanitary sewer.

FEEDER WATER SUPPLY

The water supply to the ACF-60 should be filtered and unheated water. The in-line strainer should be used to prevent debris from entering the feeder and potentially fouling the flowmeter, solenoid valves, mining nozzles and other small openings in the feeder.

In cases where there is insufficient pressure (10 psi minimum is required) to operate the feeder, supply water can be taken from between the pump and the filter. Be sure to use the supplied strainer. The strainer must be kept clean at all times in order to provide enough water flow and pressure to operate the feeder.

An alternative installation method utilizing a potable water source for the feeder supply water can be used. When using a potable water source for the feeder supply water, a pressure regulator should be used to maintain an inlet pressure of 30 psi in addition to the in-line strainer. A backflow prevention device may also be required by local regulations when using potable water. It is recommended that a backflow prevention device be used on all installations where city water is used.

ELECTRICAL CONNECTIONS

The solenoid valves operate on 12 volts direct current. The plugs contain a converter that changes the voltage from 120 VAC to 12 V DC. Connect the electrical cord from the chlorine feed solenoid valve to the power cord with the converter and plug it into the chemical controller's sanitizer channel. Connect the electrical cord from the feeder inlet solenoid to a suitable 120 VAC GFCI protected electrical outlet.

Follow the manufacturers' installation instructions for electrical connections to the booster pump. For safety, the booster pump should be interlocked with the pool circulation pump so that it will not operate when the circulation pump is off. For additional protection against overfeeding, the isolation valves should be closed when the system is turned off.

ALTERNATIVE INSTALLATION METHODS

PRESSURE/SUCTION INSTALLATION

The effluent water from the feeder can be returned into the suction side of the pump. Returning the water in front of the pump can cause erratic controller readings. If a heater is present, corrosion or scaling can occur. Make suitable piping connections to the suction side of the pools circulation pump. It may be necessary to make specific valve adjustments so that the feeder will not be completely drained by the suction of the pump when the feeder operates at its maximum flow rate of 2.0 gpm.

SURGE PIT/VACUUM FILTER INSTALLATIONS

The effluent water from the feeder can also be returned directly into the surge pit or vacuum filter pit. Erratic controller readings can occur if chlorine is injected into the system prior to the sample line. Heater corrosion or scaling can occur if the heater is downstream of the chlorinated water injection point.

STARTUP AND ADJUSTMENT OF ACF-60

Prior to filling feeder with Vantage® Calcium Hypochlorite Tablets:

1. Open supply valves to booster pump and turn the pump on. Water should flow through the pump.

2. Check that the two solenoid valves have been plugged into the appropriate connections. The chlorine feed solenoid to the controller and the shutoff solenoid to a suitable 120 VAC GFCI protected outlet.

3. Open supply water valve to feeder.

4. Set the controller to manual feed. Alternatively, plug the chlorine feed solenoid valve into a 120 VAC outlet so that the valve will open. This lets water into the feeder.

5. Adjust the inlet water flow using the control valve to 2.0 gpm on the supplied flow meter. Allow the feeder to fill up. The water level in the lower solution tank will rise to a normal operational level (Approximately 3 to 4 inches from the bottom of the tank). As the water level increases, the float valve in the solution tank will control the outlet flow of water to match the inlet flow and keep the water level constant.

   If the water level increases to engage the level switch and the feed water shuts off due to the solenoid valve, the suction flow provided by the venturi is insufficient for proper operation. Check the supply water flow and venturi operation.

Figure 2: ACF - 60

Sidestream Installation with Booster Pump and Venturi

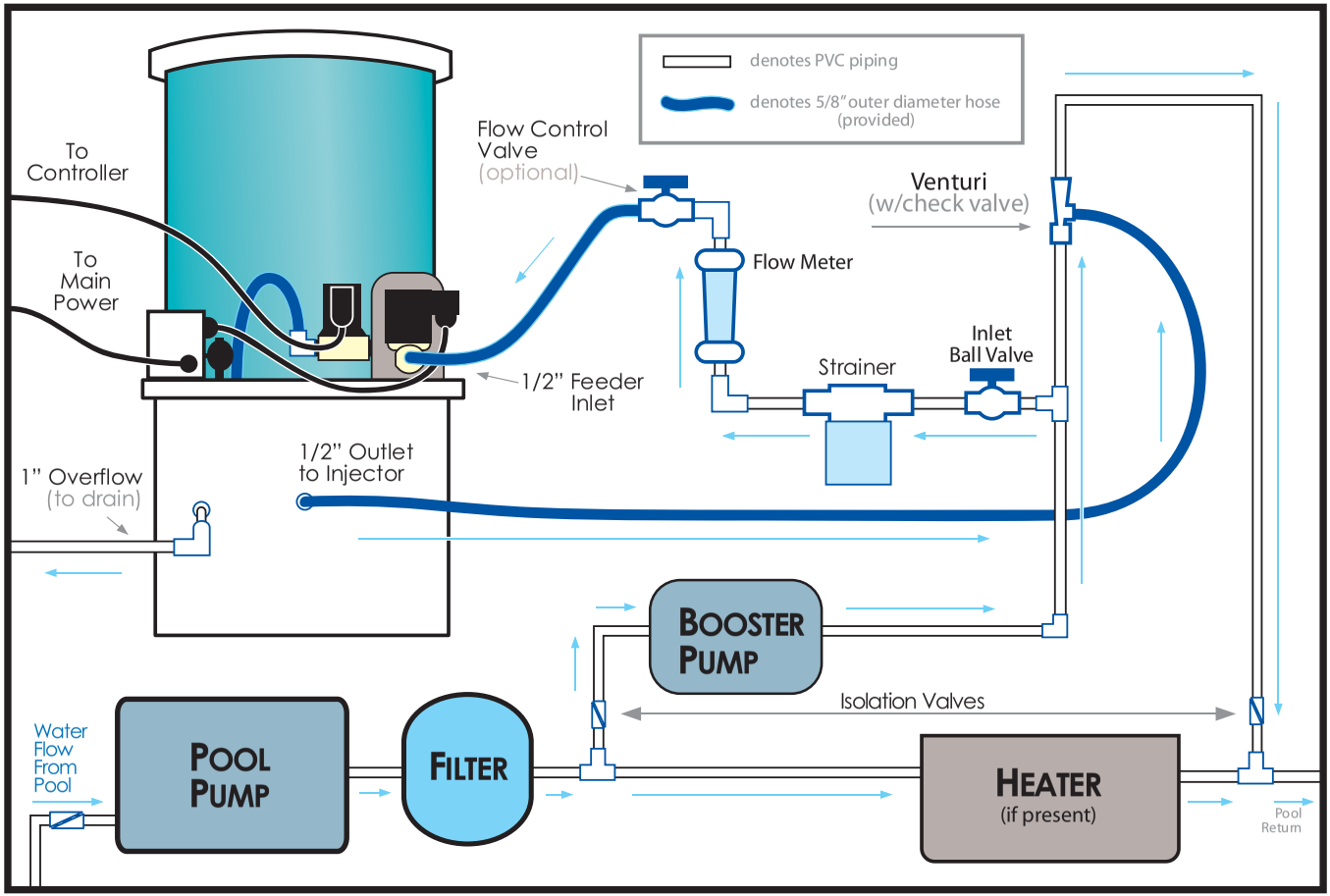

Figure 3: ACF - 60

Venturi Installation without Booster Pump

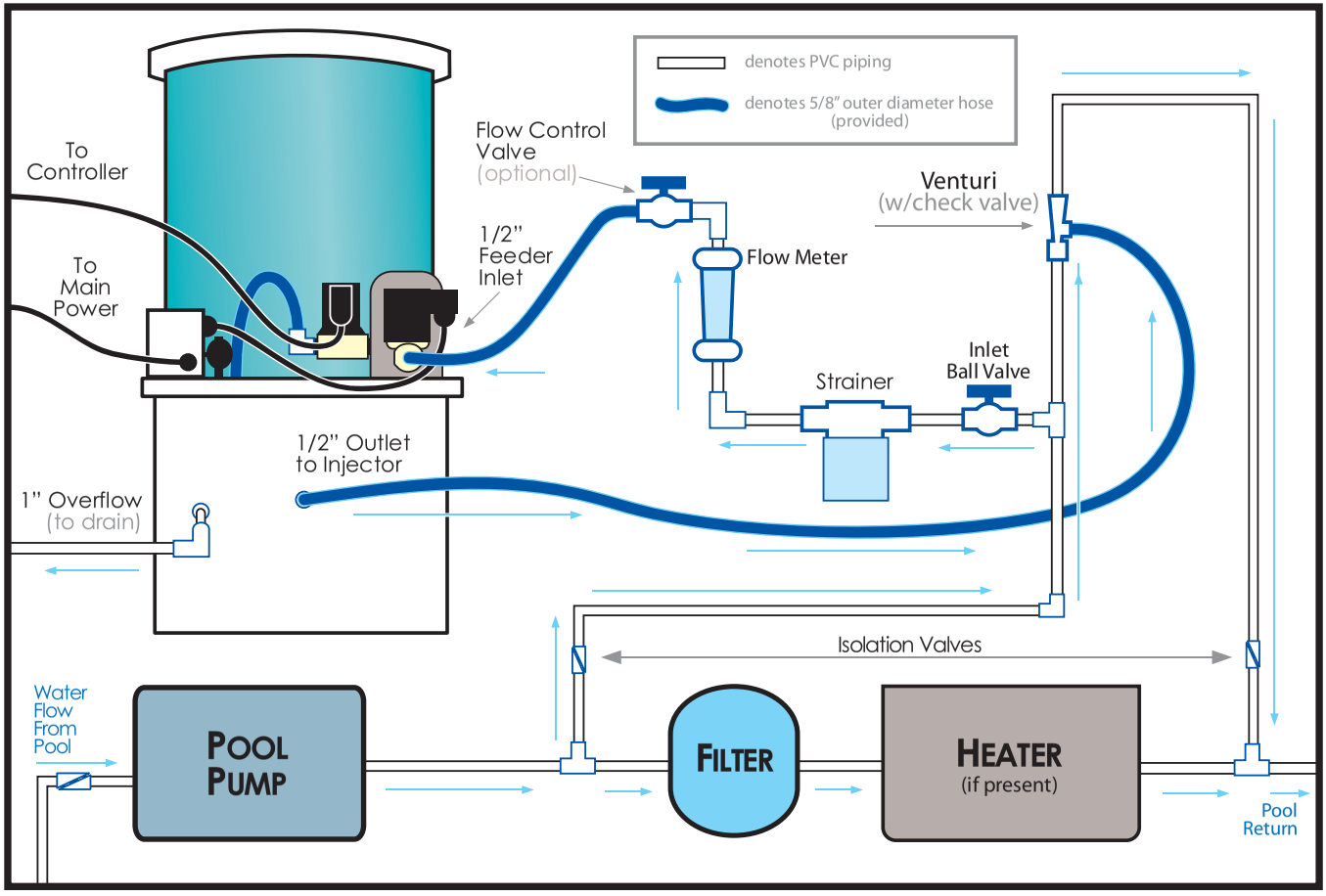

If the water level in the tank is very low and air is being sucked into the feeder outlet tube, the venturi suction flow is too great for proper operation. Check the supply water flow and reduce the venturi suction flow.

For most applications the feeder should be operated at the maximum flow rate of 2.0 gpm. This will allow the electronic controller to operate as designed to maintain the proper free chlorine residual in the water. Follow the recommendations of the controller manufacturer for proper set up and operation. At the 2.0 gpm flow rate, the feeder delivers 80 lbs. of available chlorine per day. In some instances it may be desirable to reduce this output even when used in conjunction with electronic controls. The feeder can be operated at a minimum of 1.0 gpm flow to produce a maximum output of 27 lbs. of available chlorine per day.

If the water level rises in the solution tank causing the level switch to routinely shut off the feeder, the inlet water flow is greater then the effluent flow to the venturi. First, verify that the inlet flow is set to 2.0 gpm using the supplied flow meter when the chlorine feed solenoid valve is open (water will be spraying into the upper tank). Second, verify that the venturi is extracting 2 to 3 gpm from the lower solution tank. This can be done in a simple fashion by temporarily installing a flow meter between the feeder effluent and the venturi injector. Adjust the influent and effluent flow as necessary. In some situations it may be desirable to adjust the float valve in the solution tank using the bolt located on the float valve arm. For detailed instructions on adjusting the float, contact your Vantage Representative.

6. Prior to filling feeder read First Aid, Precautionary Statements, Directions for Use and Storage and Disposal directions on the Vantage Calcium Hypochlorite Tablet label.

FILLING THE FEEDER:

1. Remove feeder lid. Partially fill the feeder with Vantage Calcium Hypochlorite Tablets. Do not fill the feeder completely for the first few days or until proper operation has been observed. Replace feeder lid.

2. **DANGER: Use only VANTAGE® Calcium Hypochlorite Tablets. Never add or use any other type of chlorinating or brominating chemicals in this feeder. Use of any other product may lead to explosion or fire possibly leading to personal or bodily injury. Always read and follow directions and precautionary statements on the calcium hypochlorite tablet label.**

3. Ensure that the feeder is operating properly by observing the water level in the tank. The water level should remain relatively constant. The float valve controls the water level in the solution tank by increasing and decreasing the suction flow from the venturi. Under normal operating conditions this water level prevents air from being drawn into the pool. If the water level is low and the venturi is drawing air into the system, check the supply water line for proper flow rate.

4. If the water level in the tank gets two high, the level switch will engage the inlet water solenoid valve and stop all supply water to the feeder. Check the supply water flow for proper influent flow rate and check the venturi for proper operation.

5. Manually test pool water and adjust the feeder and controller until the chlorine level stays between 1.0 and 5.0 ppm.

CLEANING AND MAINTENANCE

TABLET HOPPER

1. Unplug both of the solenoid valves and turn the water supply to the feeder off.

2. Open the top and remove any remaining tablets in the hopper and place into a clean dry pail.

3. Rinse, brush, and clean out the tablet hopper and tablet tray with water. For convenience purposes the entire tablet hopper can be removed by simply disconnecting the 3/8" tubing at the chlorine feed solenoid and lifting the hopper off of the solution tank.

SOLUTION TANK

1. Disconnect the 3/8" chlorine feed tubing at the chlorine feed solenoid. Lift off the Tablet Hopper to gain access to the solution tank. Alternatively, limited access to the lower solution tank can be gained by sliding back the entire tablet hopper and plate 4-5 inches.

2. Rinse, brush and clean out the solution chamber with fresh water.

3. Rinse brush and clean all feeder parts with fresh water. The float assembly and other parts can be damaged with rough handling. Use caution when cleaning these parts.

4. When all parts have been cleaned, the interior of the tubing, venturi check valve and venturi can be cleaned by adding a mild solution of acid to the feeder and allowing it to be drawn through the piping by the action of the venturi. **DANGER: Be sure that all chlorine has been removed from the feeder prior to addition of any product containing acid.** Mixing of chlorine and muriatic acid can produce hazardous conditions leading to personal or bodily injury.

5. After addition of acid to the feeder, allow the feeder to operate with fresh water for several cycles to remove all acid from the feeder. All acid must be removed from feeder prior to the addition of chlorine.

6. Refill feeder with appropriate amount of Vantage Calcium Hypochlorite Tablets, replace feeder lid, plug in both solenoid valves, turn on water and adjust flow rate for proper chlorine output.

7. Check feeder operation to ensure feeder is working properly.

Hazardous conditions to avoid:

DURING BACKWASHING CYCLE

Prior to beginning the backwash cycle, turn booster pump off and close the inlet and outlet ball valves to prevent water flow into the feeder during the backwash cycle. Once backwashing cycle is completed, return valves to previous setting and resume booster pump operation.

SHOCKING OR SUPERCHLORINATING

Prior to the application of shock or superchlorinating product to the pool, turn booster pump off and close the inlet and outlet ball valves to prevent water flow into the feeder. Do not reopen valves for at least 2 hours following application of shock or superchlorinating product to prevent contamination of tablets.

WINTERIZATION OF FEEDER

If the pool circulation system is shut down during the winter the following procedures are recommended:

1. Operate the feeder until all the Vantage Calcium Hypochlorite Tablets are dissolved.
2. Flush the feeder with fresh water. Follow cleaning procedures to remove any residue in the feeder. Be careful when handling the float assembly and level switch.
3. Drain feeder completely of water.
4. Disconnect feeder from power and water supply.
5. Store feeder out of sun in a clean, dry location.

LIMITED WARRANTY

AllChem Performance Products hereby warrants, subject to the conditions set below, that should the Vantage® ACF-60 Automatic Chlorinating Feeder or any component part included with the ACF-60 prove defective by reason of improper workmanship or material from the original date of retail purchase and up to one year thereafter; AllChem Performance Products, LP will replace the defective part(s) upon receipt of those same part(s) from the purchaser. AllChem Performance Products, LP will not pay for any labor or shipping costs incurred in the removal or replacement of those parts.

CONDITIONS

1. Registration: the registration card included must be filled out completely and forwarded to AllChem Performance Products, LP, 6010 NW First Place, Gainesville, FL 32607 within 30 days of installation.

2. Notification: the purchaser must notify AllChem Performance Products, LP within 30 days after discovery of part failure, stating which part(s) were defective or broken.

3. Use of unauthorized chemicals: Only **VANTAGE® Calcium Hypochlorite Tablets** (EPA Reg. No. 69681-14) should be placed in a Vantage® Automatic Chlorinating Feeder. Use of any other chemical may lead to hazardous conditions and will void this warranty.

4. Installation and operation of the warranted equipment must be in accordance with the instructions contained in the Installation and Operation Manual. Should the warranted equipment prove defective in workmanship or material, the consumer's sole remedy shall be replacement of defective parts as is herein above expressly provided: and under no circumstances shall AllChem Performance Products, LP be liable for any loss or damage direct or consequential arising from the use of the warranted equipment.

Some states do not allow limitations on how long an implied warranty lasts or the exclusion or limitation of accidental or consequential damages, so the above limitation or exclusion may not apply. This warranty gives the purchaser specific legal rights and (s)he may also have other rights, which vary, from state to state.

For technical support, please call 352-333-7317

Fill out the warranty information on the card below **in black ink** and mail within 14 days of Product Purchase/Installation to:

AllChem Performance Products, LP
6010 NW First Place
Gainesville, FL 32607
Attn: Warranty Dept.

ACF-60 Warranty Registration Card

Facility Name_____

Physical Address_____

City_____ State_____ Zip_____

Facility Contact_____ E-Mail Address_____

Purchased From_____

Installed By_____ Date of Installation_____

Product Model_____ Product Serial Number_____

☐ New Installation ☐ Replacement Installation

Pool Volume_____ ☐ Indoor ☐ Outdoor

Copyright 2007
AllChem Performance Products, LP