SPLASH & SLAM

INSTALLATION INSTRUCTIONS

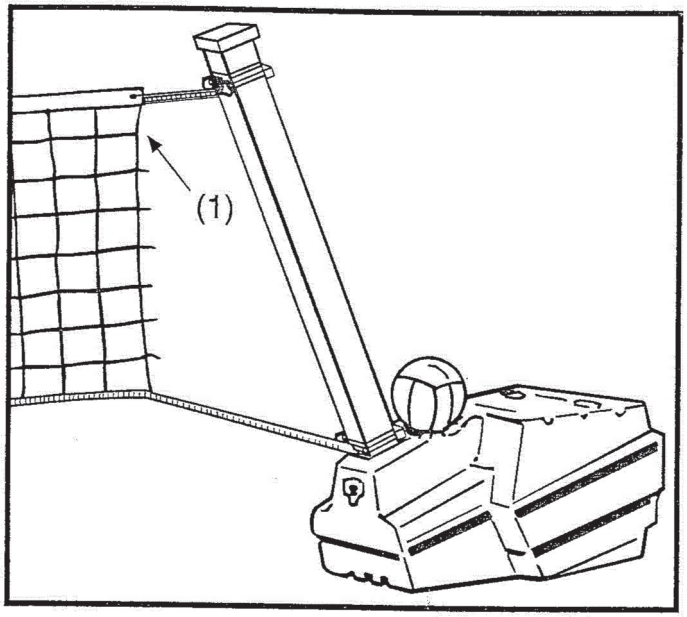

- Position bases on pool edge, lower hose into fill hole on top of base, and fill each base with water until full. Then push white plug tightly into fill hole on each base.
- Take a post and lower end with 2" hole (with hole facing water) into base hole until it rests on the ground. Put 2 Volleyball height adjustment assemblies on each post (with hand knobs facing water), adjust to desired height and tighten hand knobs. Then push a white post cap on top end of each post.
- Attach net as pictured, tying ropes to crimped part of bracket. Excess strands on side of netting can be cut off with scissors (1). Additional rope is supplied if pool is more than 30' across. Use 1/4" rope with a stainless ring for top 2 ropes and 1/8" rope for bottom rope. Rope ends should be singed if cut so they don't unravel. If net needs to be shortened to a customized length, see instruction on back.

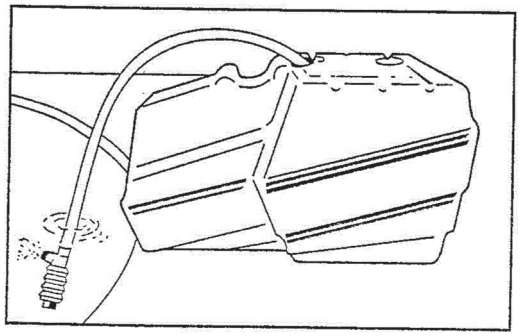

TAKE DOWN

To drain base, remove fill plug and lower hose end of hand pump siphon into base until it rest on the bottom. Then at ground level, squeeze red bulb until water starts flowing and then drop red bulb into pool (or lay it on level or downward sloping ground). Re-check hose end of siphon (looking through hole in base) to make sure end is resting on very bottom of base. Base will self-drain in about 45 minutes.